FURUTECH

PURE TRANSMISSION

High Performance AC Inlet

FI-06(G) FI-06(R)

Features

- Pure copper α (Alpha) Conductor
- Materials: Nylon/fiberglass
- Specifications: Accommodates wire diameters up to 3.5mm (set-screw)
- Dimensions: 50.5 (W) x 23.9mm (D) x 33.5mm (H) ±0.1mm
- Rated: 15A/250V

Dimensions and Panel Cut-out Size

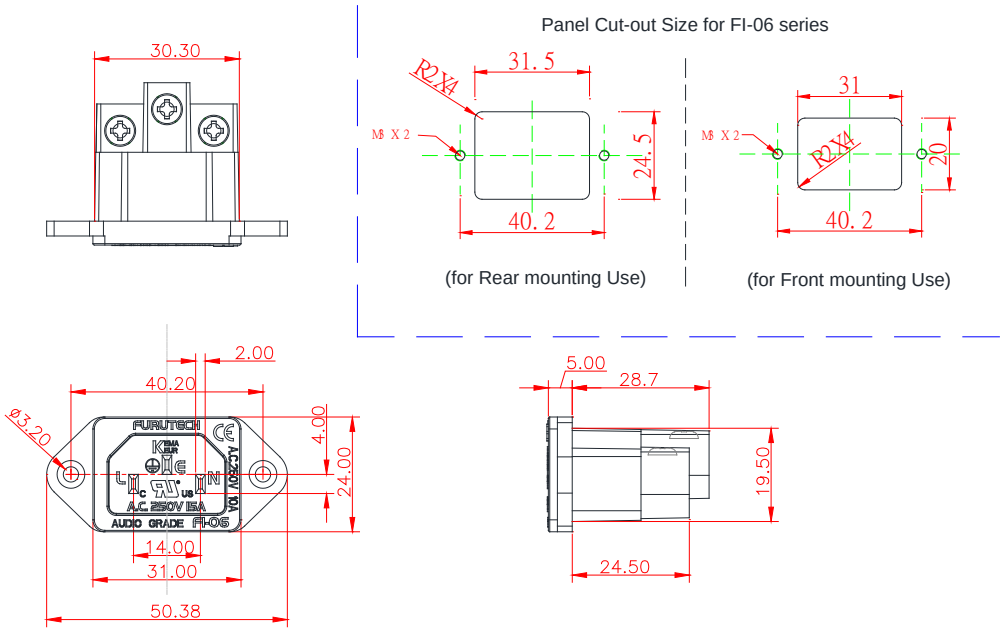

Make A More Powerful Connection with Furutech!

FURUTECH CO., LTD • service@furutech.com • www.furutech.com